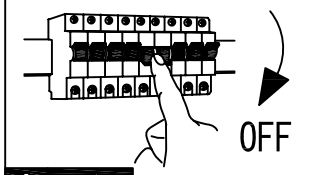

A 1/2

B 1

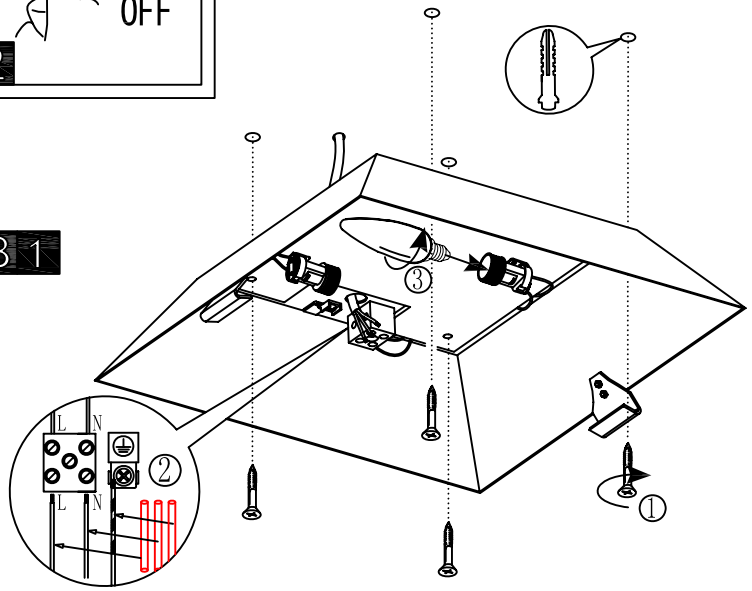

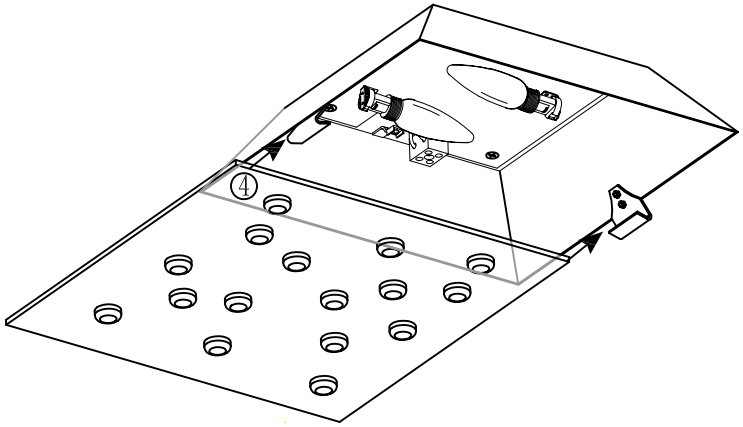

B 2

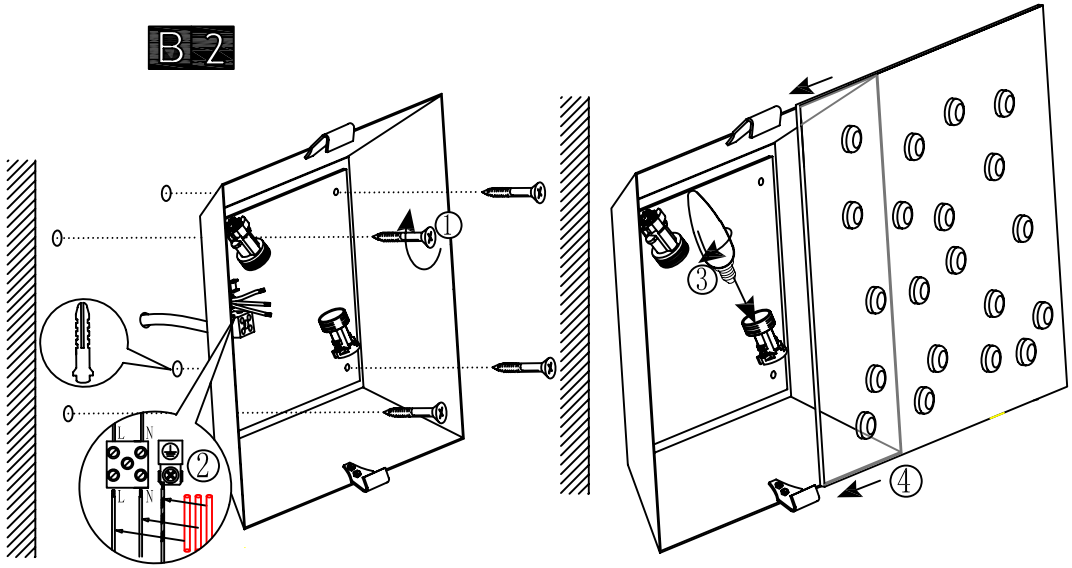

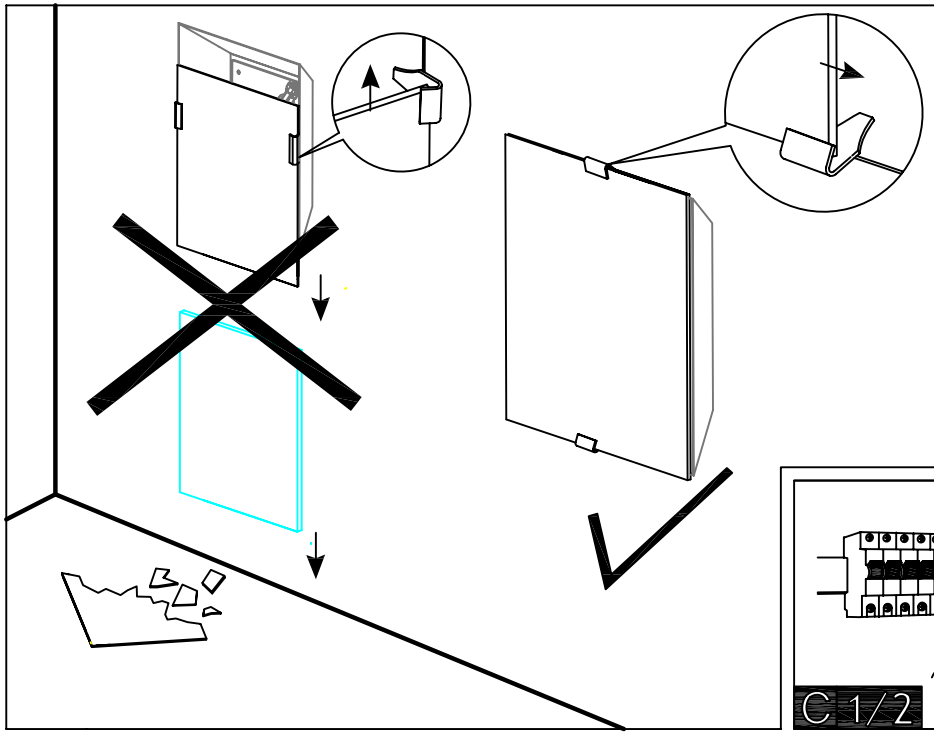

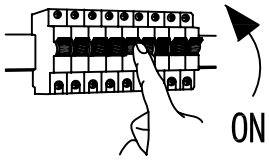

C 1/2

BLA87306-1